Keyhole

Keyhole block fenders are moulded rubber units designed for heavy-duty protection on the bows and sterns of tugboats.

Suitable for pontoons and RoRo ramp ends. Mounted using steel pins through the fixing holes for easy replacement.

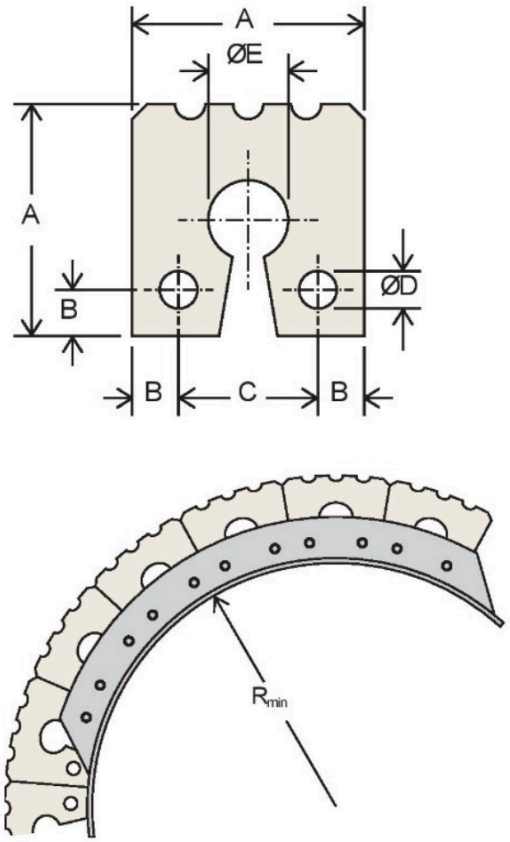

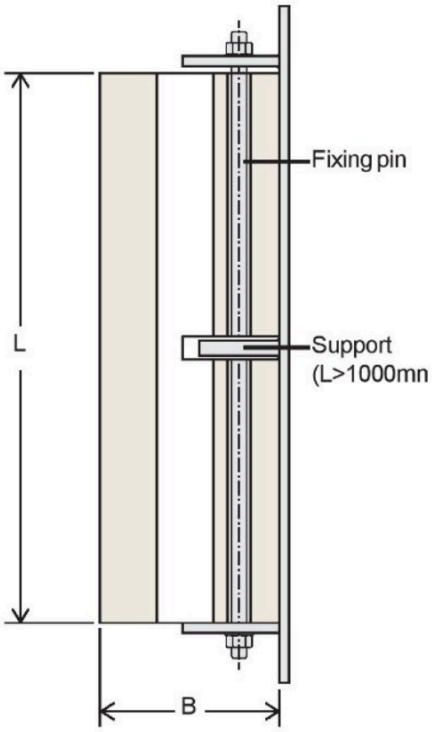

Type	A	B	C	ØD	E	F	ØG	LMAX	Flat Bar	R(min)	Weight
200	200	200	35	28	35	130	90	2000	100 x 15	450	33
250	250	250	50	33	50	150	100	2000	125 x 20	600	54
300	300	300	60	33	60	180	115	1750	150 x 20	800	80
350	350	350	70	33	70	210	125	2000	175 x 25	1000	114

Performance tolerance: +/-20%.
Dimensions are in millimetres.
Weights are in kg per metre length.
Reaction relates to flat fender area and standard rubber grade.
Custom sizes and fixing details are available on request.

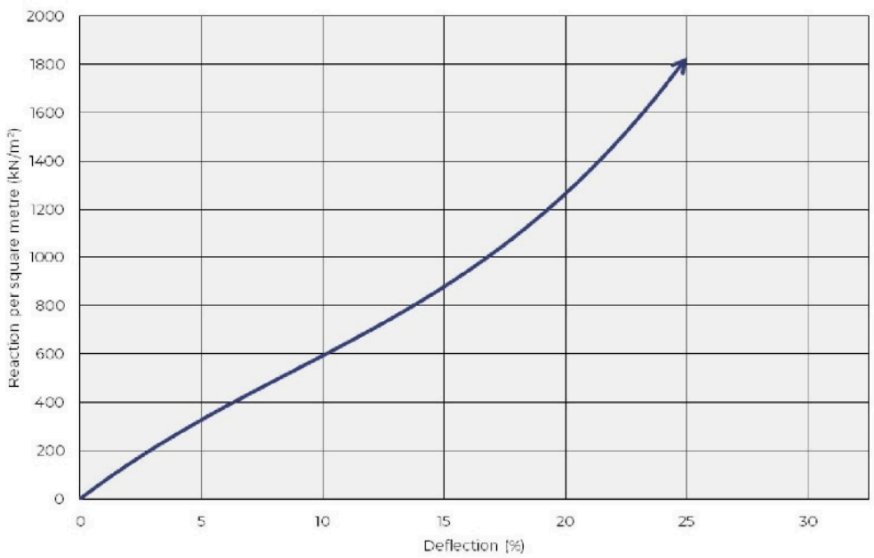

LIE MARINE SYSTEMS AS

info@liemarinesystems.no
liemarinesystems.no